Dual Channel Hall-effect Switch with Dual Quadrature Outputs

FEATURES

- Two matched Hall switches on a substrate
- Dual quadrature outputs
- Superior temperature stability
- High sensitivity (B_{OP} and B_{RP})
- Supports a wide voltage range

  --2.5 to 24V
- Solid-state reliability
- Small package sizes

APPLICATIONS

- Anti-pinch electric motor control
- Magnetic encoding
- Rotating shaft monitoring
- Garage door openers
- Power sliding doors
- Sunroofs motor

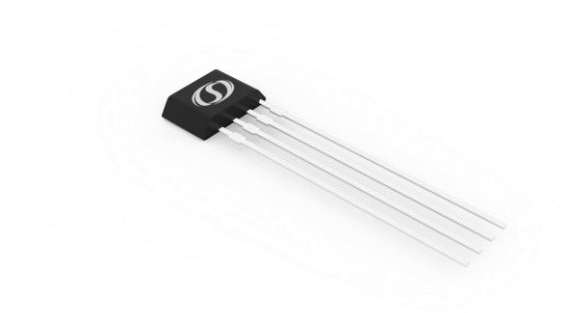

DESCRIPTION

The SC2536 is a dual-channel, bipolar switch with two Hall-effect sensing elements, each providing a separate digital output for speed and direction signal processing capability. The Hall elements are photolithographically aligned to better than 1um. Maintaining accurate mechanical location between the two active Hall elements eliminates the major manufacturing hurdle encountered in fine-pitch detection applications. The SC2536 is a highly sensitivity, temperature stable magnetic sensing device ideal for use in ring magnet based, speed and direction systems located in harsh automotive and industrial environments.

The Hall elements of the SC2536 are spaced 1.6mm apart, which provides excellent speed and direction information for small-geometry targets. Extremely low-drift amplifiers guarantee symmetry between the switches to maintain signal quadrature. An on-chip regulator allows the use of this device over a wide operating voltage range of 2.5 to 24V

The SC2536 is available in a 4-pin SIP package. Both packages are lead (Pb) free, with 100% matte tin lead frame plating.

CONTENTS

BLOCK DIAGRAM

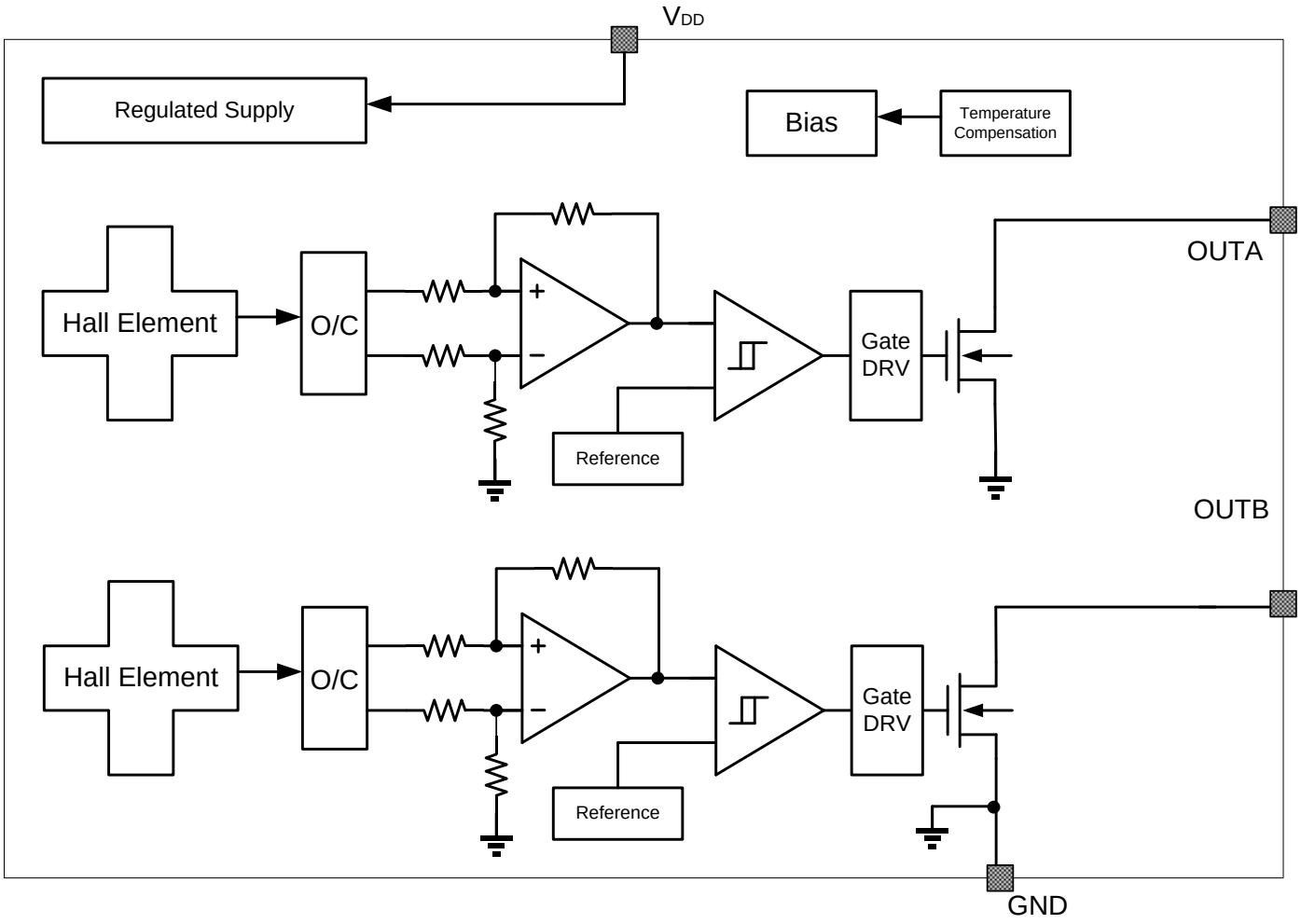

ORDERING INFORMATION

Part Number	Packing	Mounting	Ambient, T_A	B_{OP}(Typ.)	B_{RP}(Typ.)
SC2536VB	Bulk, 500 pieces/bag	4-pin SIP	-40℃ to 150℃	+2.0mT	-2.0mT

TERMINAL CONFIGURATION

4-Terminal SIP
VB Package
(Top View)

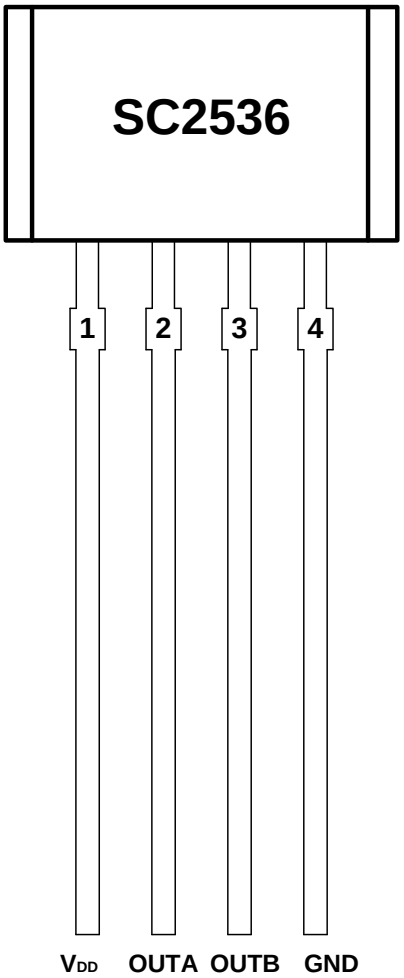

Terminal		Type	Description
Name	Num.		
V_{DD}	1	PWR	2.8V ~ 24 V power supply
OUTA	2	Output	A channel output. The open drain requires a pull-up resistor
OUTB	3	Output	B channel output. The open drain requires a pull-up resistor
GND	4	Ground	Ground terminal

ABSOLUTE MAXIMUM RATINGS

over operating free-air temperature range

Parameter	Symbol	Min.	Max.	Units
Power supply voltage	V_{DD}	-0.5	28	V
Output terminal voltage	V_{OUT}	-0.5	28	V
Output terminal current sink	I_{SINK}	0	30	mA
Operating ambient temperature	T_A	-40	150	℃
Maximum junction temperature	T_J	-55	165	℃
Storage temperature	T_{STG}	-65	175	℃

Note: Stresses above those listed here may cause permanent damage to the device. Exposure to absolute maximum rating conditions for extended periods may affect device reliability.

ESD PROTECTION

Human Body Model (HBM) tests according to: standard AEC-Q100-002 HBM

Parameter	Symbol	Min.	Max.	Units
ESD-Protection	V_{ESD}	-6	6	kV

THERMAL CHARACTERISTICS

Symbol	Parameter	Test Conditions	Rating	Units
$R_{\theta JA}$	VB Package thermal resistance	Single-layer PCB, with copper limited to solder pads	177	℃/W

OPERATING CHARACTERISTICS

over operating free-air temperature range (V_{DD} = 5.0V, unless otherwise noted)

Symbol	Parameter	Test Conditions	Min.	Typ.	Max.	Units
V_{DD}	Operating voltage	$T_J < T_{J(Max.)}$	2.8	--	24	V
I_{DD}	Operating supply current	V_{DD}=2.8 to 24 V	1.0	3.0	4.5	mA
t_{on}	Power-on time		--	35	50	µS
I_{QL}	Off-state leakage current	Output Hi-Z	--	--	1	µA
$R_{DS\ (on)}$	FET on-resistance	V_{DD}=5V, I_O=10mA, T_A=25℃	--	20	--	Ω
t_d	Output delay time	B=B_{RP} to B_{OP}	--	13	25	µS
t_r	Output rise time	R1=1Kohm Co=50pF	--	--	0.5	µS
t_f	Output fall time	R1=1Kohm Co=50pF	--	--	0.2	µS
Magnetic Characteristics						
f_{BW}	Bandwidth		40	--	--	kHz
B_{OP}	Operated point	VB Package	--	1.5	3.0	mT
B_{RP}	Release point		-3.0	-1.5	--	mT
B_{HYS}	Hysteresis		--	3.0	--	mT
B_O	Magnetic offset	B_O=(B_{OP}+B_{RP})/2	--	0	--	mT

1mT=10Gs

TYPICAL CHARACTERISTICS

Quiescent Current versus Supply Voltage

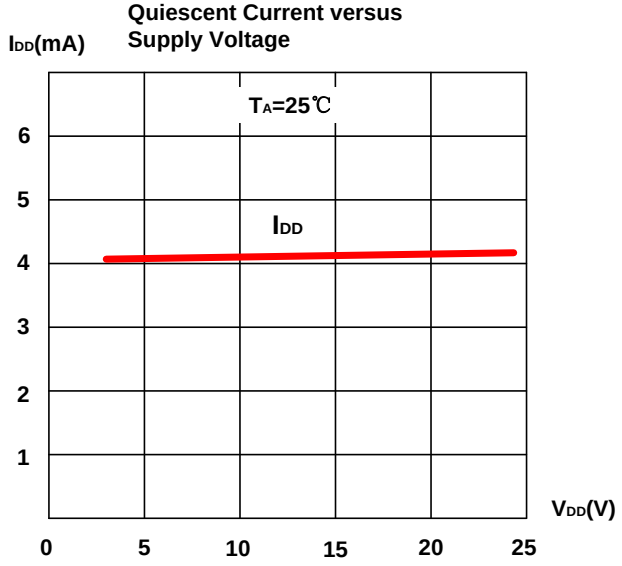

Quiescent Current versus Temperature

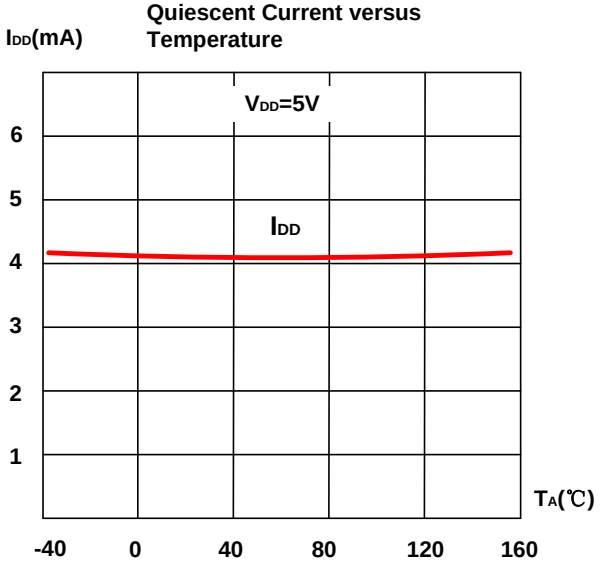

Saturation Voltage versus Supply Voltage

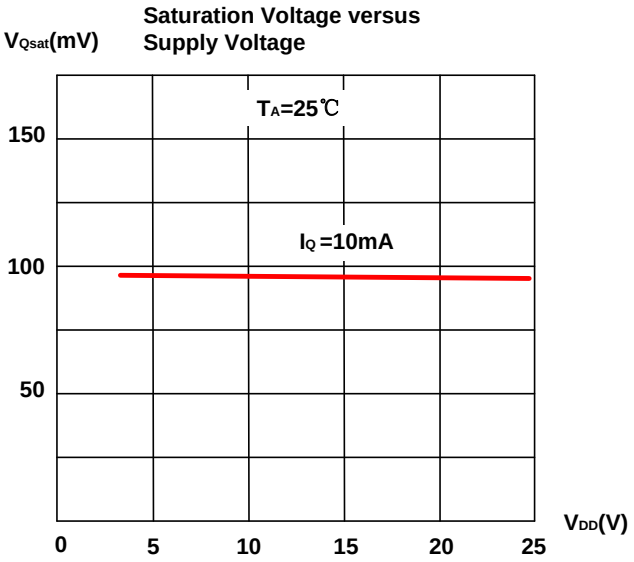

Saturation Voltage versus Temperature

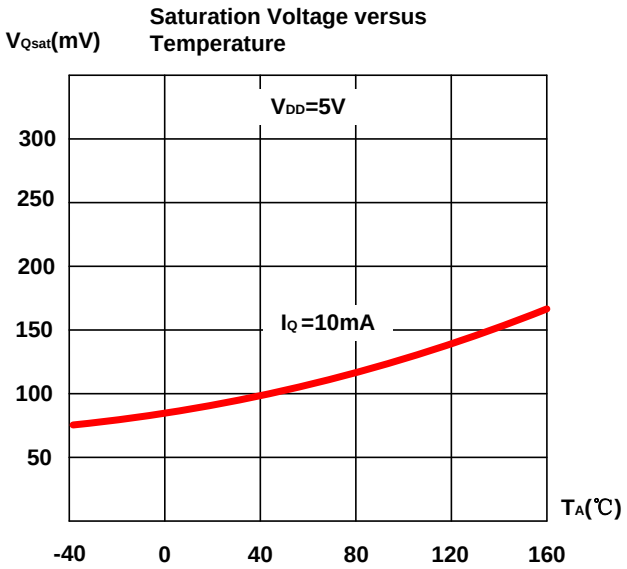

TYPICAL CHARACTERISTICS (continued)

B_{OP} and B_{RP} versus Temperature

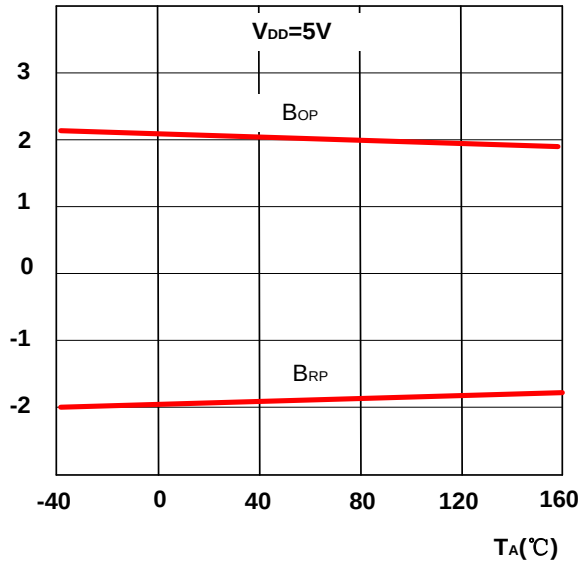

Hysteresis versus Temperature

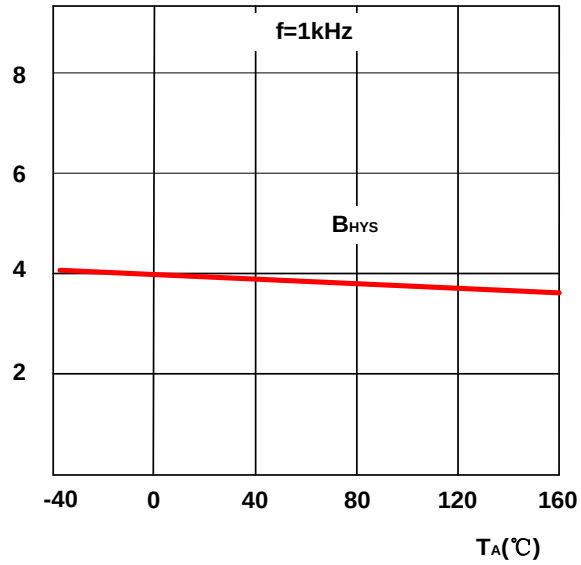

TYPICAL APPLICATION

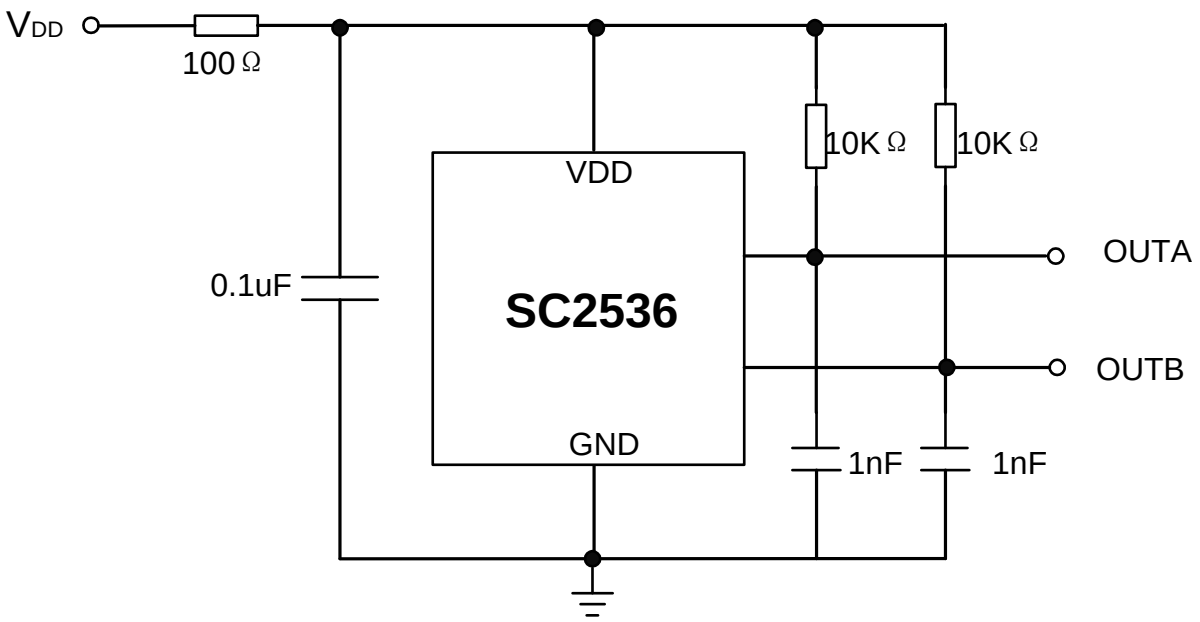

TYPICAL OUTPUT WAVEFORM

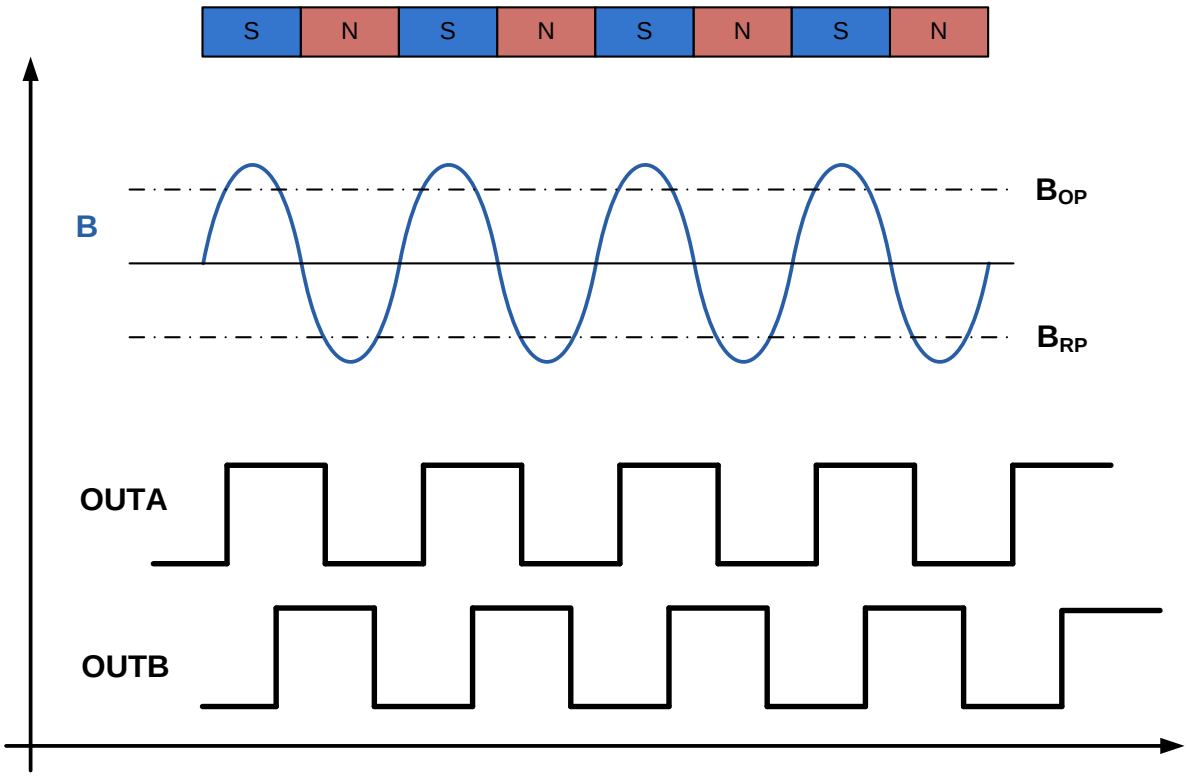

PACKAGE INFORMATION (VB)

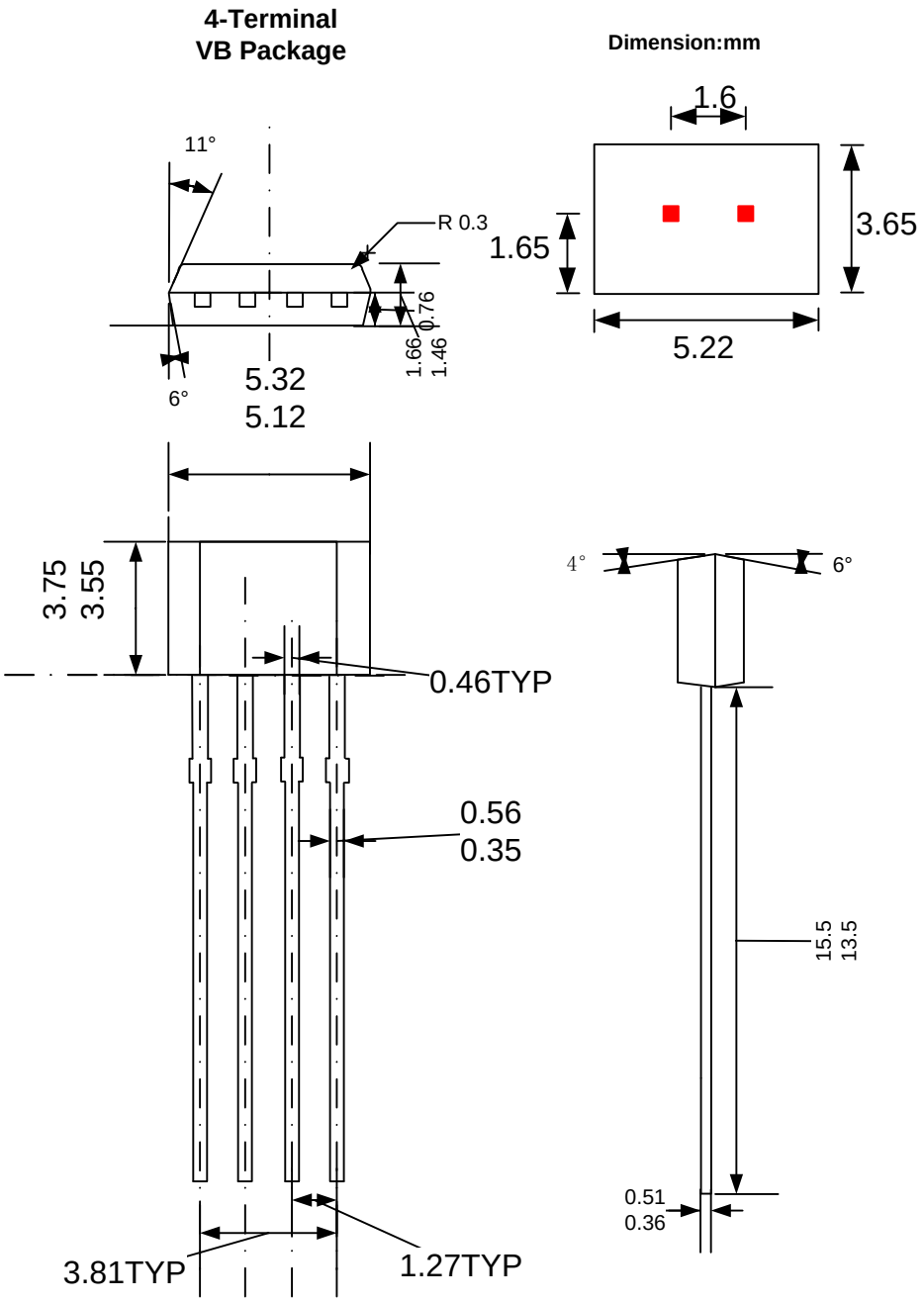

Notes:

1. *Exact body and lead configuration at vendor's option within limits shown.*
2. *Height does not include mold gate flash.*

Where no tolerance is specified, dimension is nominal.

REVISON HISTORY

Revision	Date	Description
Rev0.1	2017-11-19	Preliminary datasheet
Rev2.3	2018-01-12	The final revision of old datasheet
RevA/1.0	2020-11-21	Unified datasheet format