Features

- 650V, 12A
- $R_{DS(ON)}$ = 0.38Ω (Max.) @ V_{GS} = 10V, I_D = 6A
- Very low FOM $R_{DS(ON)}$XQg
- Extremely low switching loss
- Good stability and uniformity

Application

- Switch Mode Power Supply(SMPS)
- Uninterruptible Power Supply (UPS)
- Power Factor Correction(PFC)

Package

WFF12N65SAH

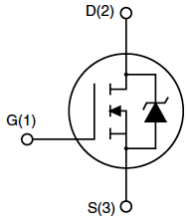

Absolute Maximum Ratings T_C=25℃ unless otherwise specified

Symbol	Parameter		Max.	Units
V_{DSS}	Drain-Source Voltage		650	V
V_{GSS}	Gate-Source Voltage		± 30	V
I_D	Continuous Drain Current note1	T_C = 25℃	12	A
I_{DM}	Pulsed Drain Current note2		48	A
E_{AS}	Single Pulsed Avalanche Energy note3		120	mJ
P_D	Power Dissipation	T_C = 25℃	48	W
$R_{\theta JC}$	Thermal Resistance, Junction to Case		2.6	℃/W
$R_{\theta JA}$	Thermal Resistance, Junction to Ambient		70	℃/W
T_J, T_{STG}	Operating and Storage Temperature Range		-55 to +150	℃

*Drain current limited by maximum junction temperature

Electrical Characteristics T_C=25℃ unless otherwise specified

Symbol	Parameter	Test Condition	Min.	Typ.	Max.	Units
Off Characteristic						
$V_{(BR)DSS}$	Drain-Source Breakdown Voltage	V_{GS} = 0V,I_D = 250μA	650	-	-	V
I_{DSS}	Zero Gate Voltage Drain Current	V_{DS} = 650V, V_{GS} = 0V	-	-	1	μA
I_{GSS}	Gate to Body Leakage Current	V_{DS} = 0V, V_{GS} = ±30V	-	-	±100	nA
On Characteristics						
$V_{GS(th)}$	Gate Threshold Voltage	V_{DS} = V_{GS}, I_D = 250μA	2.5	3.5	4.5	V
$R_{DS(on)}$	Static Drain-Source On-Resistance	V_{GS} =10V, I_D = 6A	-	0.32	0.38	Ω
g_{fs}	Forward Transconductance	V_{GS} =10V, I_D = 6A	-	9.4	-	S
Dynamic Characteristics						
C_{iss}	Input Capacitance	V_{DS} =100V, V_{GS} = 0V, f = 1.0MHz	-	718	-	pF
C_{oss}	Output Capacitance		-	34	-	pF
C_{rss}	Reverse Transfer Capacitance		-	1.1	-	pF
Q_g	Total Gate Charge	V_{DS} = 520V, I_D = 10A, V_{GS} = 10V	-	18.1	-	nC
Q_{gs}	Gate-Source Charge		-	3.6	-	nC
Q_{gd}	Gate-Drain("Miller") Charge		-	7.7	-	nC
Switching Characteristics						
$t_{d(on)}$	Turn-On Delay Time	V_{DD} = 325V, I_D = 10A, R_G = 25Ω	-	17.3	-	ns
t_r	Turn-On Rise Time		-	25	-	ns
$t_{d(off)}$	Turn-Off Delay Time		-	75	-	ns
t_f	Turn-Off Fall Time		-	22	-	ns
Drain-Source Diode Characteristics and Maximum Ratings						
I_S	Maximum Continuous Drain to Source Diode Forward Current		-	-	10	A
I_{SM}	Maximum Pulsed Drain to Source Diode Forward Current		-	-	30	A
V_{SD}	Drain to Source Diode Forward Voltage	V_{GS} = 0V, I_{SD} = 10A	-	0.9	1.3	V
t_{rr}	Reverse Recovery Time	I_S=10A,V_{GS}=0V, dIF/dt=100A/u	-	239	-	ns
Q_{rr}	Reverse Recovery Charge		-	2.53	-	uC

Notes

1. Drain current is limited by maximum junction temperature.
2. Repetitive rating : pulse width limited by junction temperature.
3 . L = 60mH, I_{AS} = 2A, V_{DD} = 50V, R_G=25Ω, Starting at T_J = 25°C
4. I_{SD} ≤ I_D, di/dt = 100A/us, V_{DD} ≤ 400V, Starting at T_J =25°C.

Typical Performance Characteristics

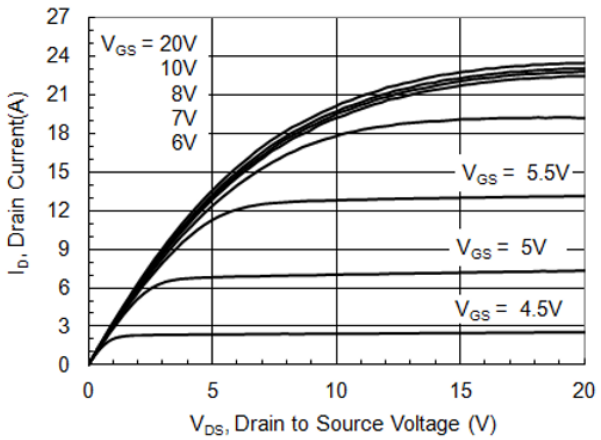

Figure 1. Output Characteristics

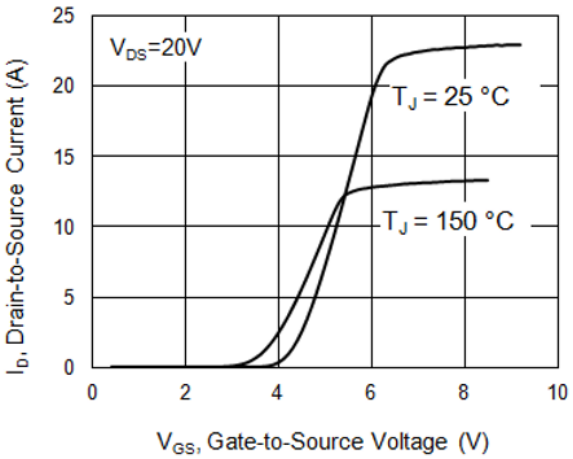

Figure 2. Transfer Characteristics

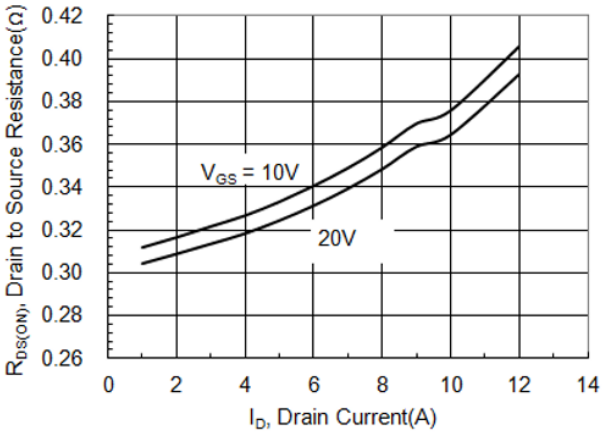

Figure 3. On-resistance vs. Drain Current

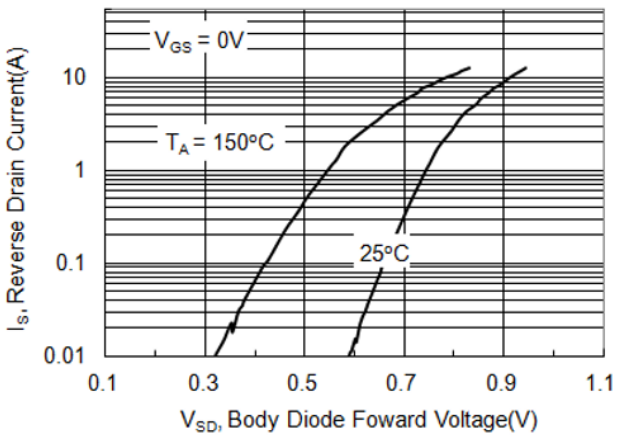

Figure 4. Body Diode Characteristics

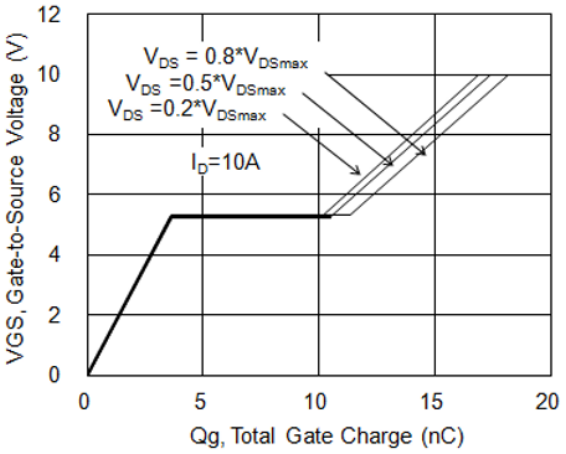

Figure 5. Gate Charge Characteristics

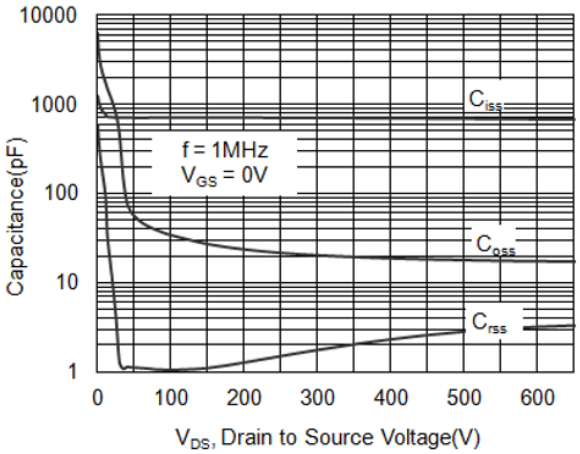

Figure 6. Capacitance Characteristic

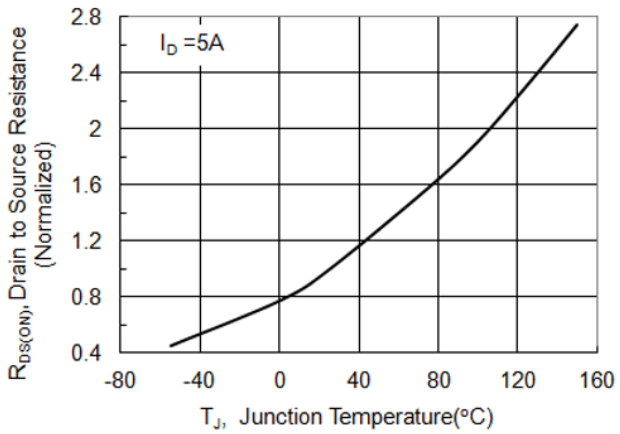

Figure 7. Threshold Voltage vs. Junction Temperature

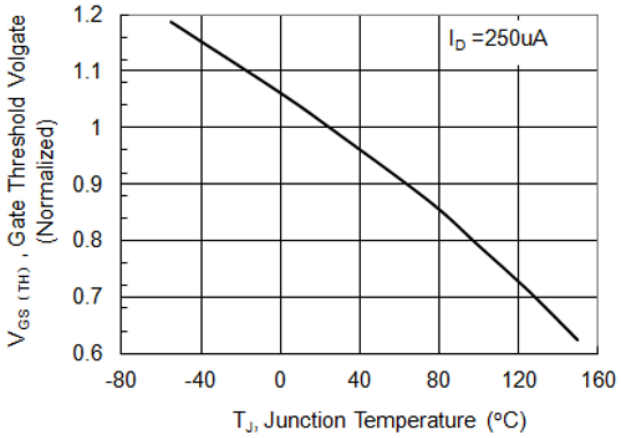

Figure 8. Normalized on Resistance vs. Junction Temperature

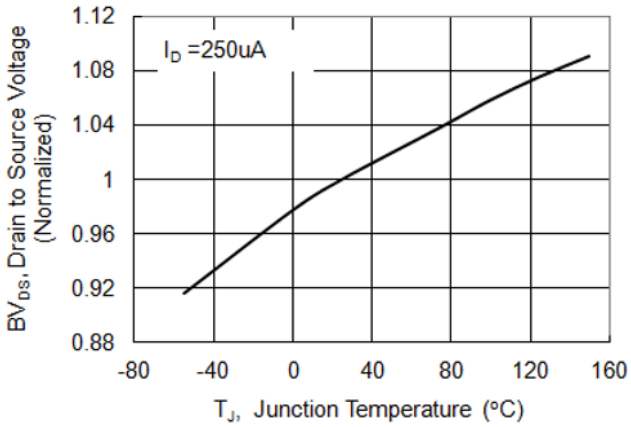

Figure 9. $V_{GS(TH)}$ vs junction temperature

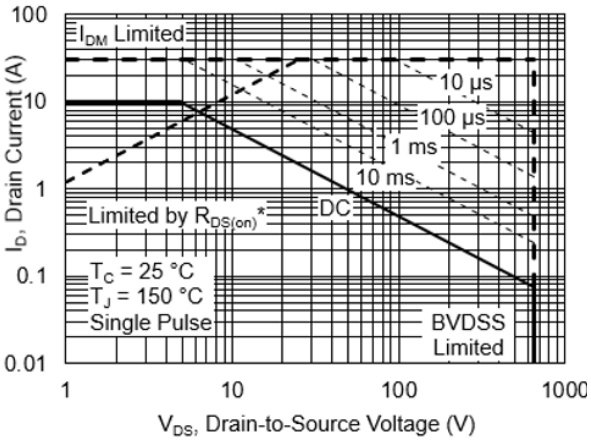

Figure 10. Safe operating area(TO-220F)

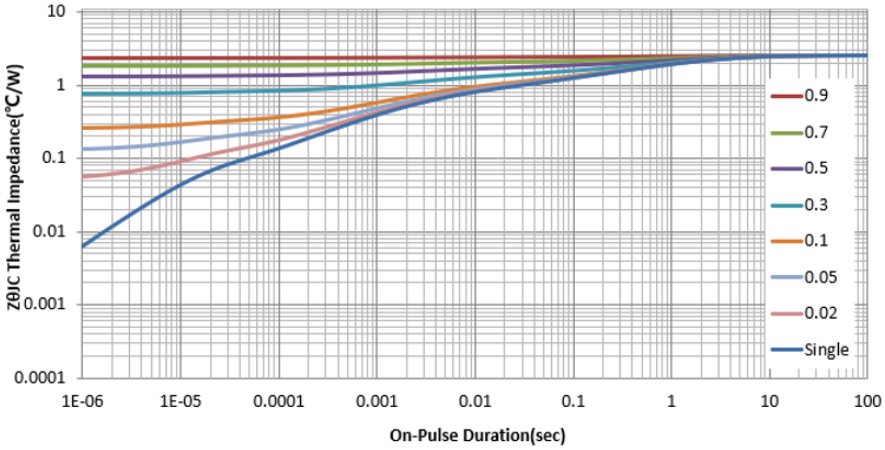

Figure 11.Transient thermal impedance (TO-220F)

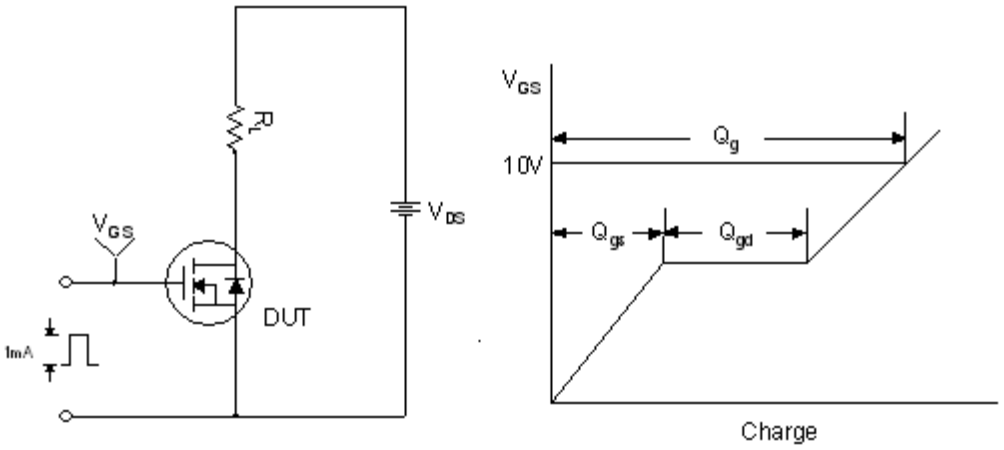

Figure 12. Gate Charge Test Circuit & Waveform

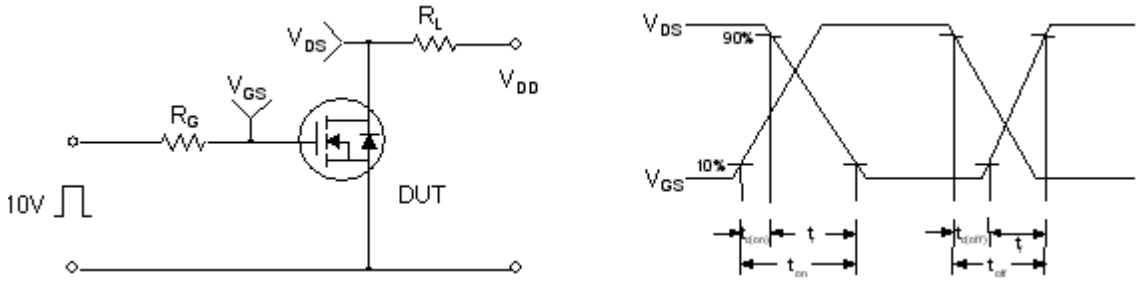

Figure 13. Resistive Switching Test Circuit & Waveforms

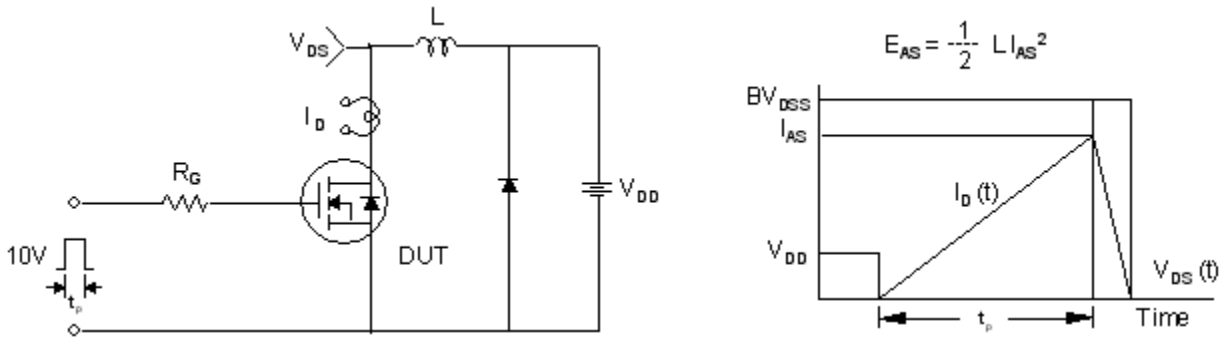

Figure 14. Unclamped Inductive Switching Test Circuit & Waveforms

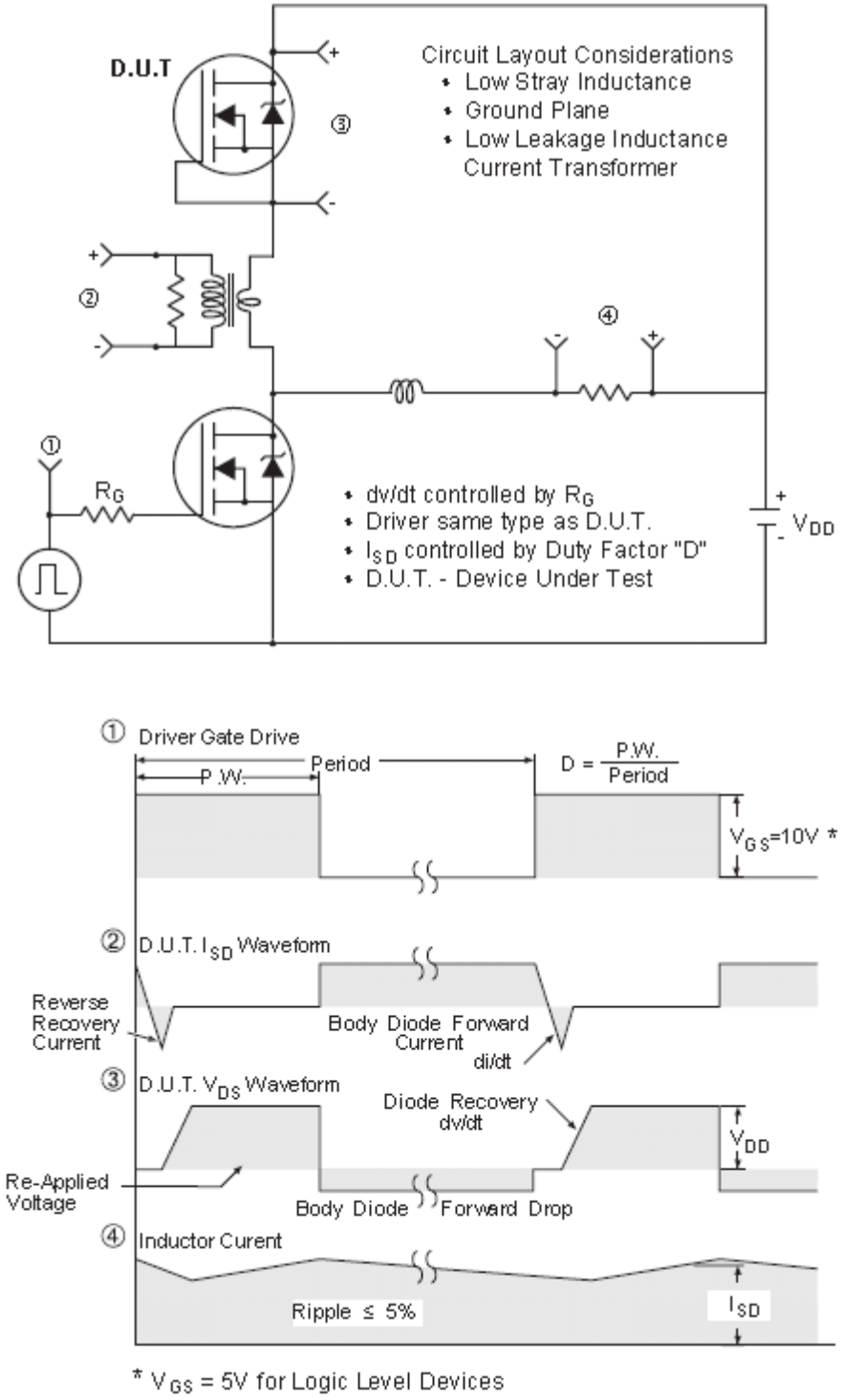

Figure 15. Peak Diode Recovery dv/dt Test Circuit & Waveforms (For N-channel)

Package Mechanical Data

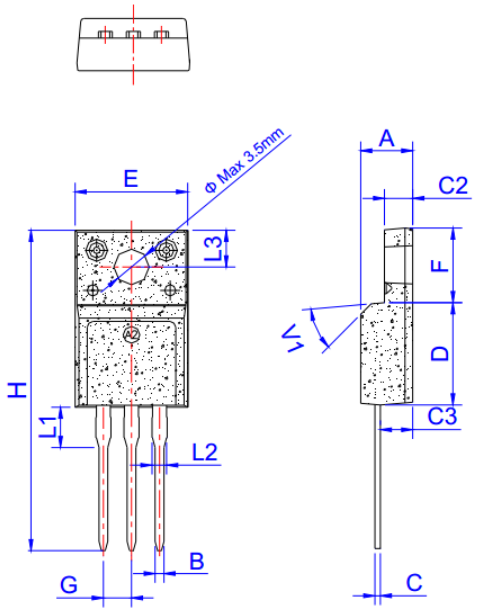

TO-220F

Ref.	Dimensions					
	Millimeters			Inches		
	Min.	Typ.	Max.	Min.	Typ.	Max.
A	4.50		4.90	0.177		0.193
B	0.74	0.80	0.83	0.029	0.031	0.033
C	0.47		0.65	0.019		0.026
C2	2.45		2.75	0.096		0.108
C3	2.60		3.00	0.102		0.118
D	8.80		9.30	0.346		0.366
E	9.80		10.4	0.386		0.410
F	6.40		6.80	0.252		0.268
G		2.54			0.1	
H	28.0		29.8	1.102		1.173
L1		3.63			0.143	
L2	1.14		1.70	0.045		0.067
L3		3.30			0.130	
V1		45°			45°	

NOTE:

1.We strongly recommend customers check carefully on the trademark when buying our product, if there is any question, please don't be hesitate to contact us.

2.Please do not exceed the absolute maximum ratings of the device when circuit designing.

3.Winsemi Microelectronics Co., Ltd reserved the right to make changes in this specification sheet and is subject to change without prior notice.

CONTACT:

Winsemi Microelectronics Co., Ltd.

ADD:Room 1002, East, Phase 2, HighTech Plaza,Tian-An Cyber Park,Che gong miao, FuTian, Shenzhen, P.R. China.
Post Code : 518040
Tel : +86-755-8250 6288
FAX : +86-755-8250 6299
Web Site : www.winsemi.com