# Non-Isolated Buck APFC Offline LED Power Switch

## FEATURES

- **Active PFC for High PF and Low THD**
- **PF>0.9 with Universal Input**
- **Built-in HV Startup and IC Power Supply Circuit**
- **Internal 650V Power MOSFET**
- **Quasi-Resonant for High Efficiency**
- **±1% CC Regulation**
- **Very Low VDD Operation Current**
- **Excellent Line and Load Regulation**
- **LED Open/Short Protection**
- **Build in Protections:**
  - **Output Over Voltage Protection (OVP)**
  - **Cycle-by-Cycle Current Limiting (OCP)**
  - **Leading Edge Blanking (LEB)**
  - **LED Open/Short Protection**
  - **On-Chip Thermal Foldback (OTP)**
- **Available in SOP-7 Package**

## APPLICATIONS

- **LED Bulb Light/Ceiling Light**
- **LED T5/T8 Tube**

## GENERAL DESCRIPTION

KP1061P is a highly integrated power switch with constant current (CC) control for LED lighting applications. The IC utilizes Quasi-Resonant (QR) Buck topology with active PFC control for high PF, low THD, and high efficiency.

KP1061P integrates 650V power MOSFET with high voltage startup and IC power supply circuit, which requires very few external components. Additionally, the system surge performance is also optimized in KP1061P to pass 2.5kV surge level with minimum system cost. The IC senses the inductor current during the whole switching cycle, which can achieve high precision CC control with excellent line and load regulation.

KP1061P integrates functions and protections of Under Voltage Lockout (UVLO), Cycle-by-cycle Current Limiting (OCP), Thermal Foldback (OTP), Output Over Voltage Protection (OVP), LED Open/Short Protection, etc.

## TYPICAL APPLICATION CIRCUIT

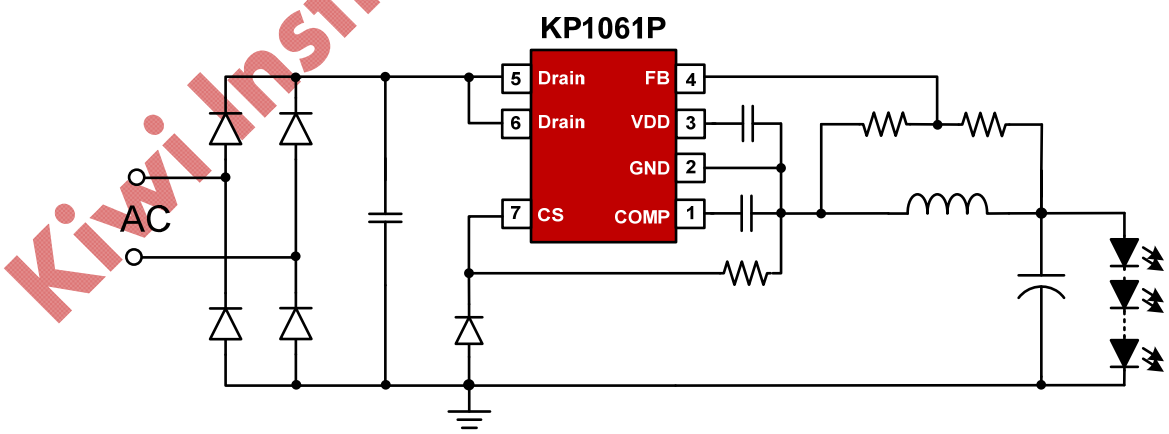


Kiwi Instruments Corp. Confidential