High-Precision Voltage Detector with Ultra-Low Quiescent Current

Description

The FP6802 asserts a reset signal whenever the V_{DD} supply voltage declines below a detection threshold. The detection threshold voltage is fixed internally with accuracy of ± 2.0%.

The output detection signal is set to be active low. That means when the power supply voltage is lower than detection threshold, the OUT pin will turn low.

FP6802 has two different output forms, CMOS output and N-channel open-drain output. It is available in space-saving SC-82 and SOT-23 packages.

Features

- Precision Monitoring of Power Supply Voltage
- Ultra-Low Supply Current at 2.5μA Typ.
- Operating Voltage Range from 1V to 5.5V
- ± 2.0% Detection Threshold Accuracy
- Reset Threshold Hysteresis: 5% Typ.
- Active Low Output
- Small Package : SC-82 and SOT-23
- RoHS Compliant

Applications

- TFT-LCD Panels
- Battery Powered Equipments
- Microprocessor Power Supply Monitoring
- Embedded Systems
- Automotive

Pin Assignments

C8 Package (SC-82)

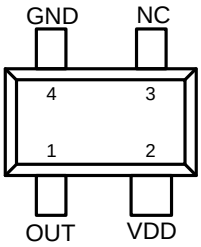

S3 Package (SOT-23-3)

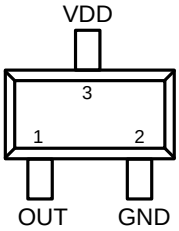

Figure 1. Pin Assignment of FP6802

Ordering Information

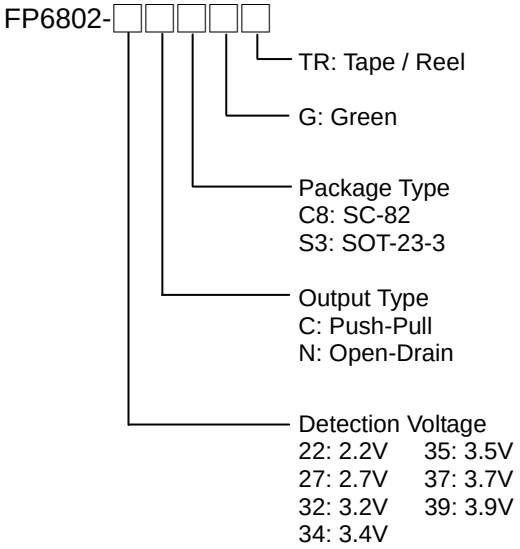

SOT-23-3 Marking

Part Number	Product Code	Part Number	Product Code
FP6802-27NS3G	**M9=**	FP6802-27CS3G	**N6=**
FP6802-32NS3G	**N2=**	FP6802-32CS3G	**N7=**
FP6802-34NS3G	**N3=**	FP6802-34CS3G	**N8=**
FP6802-37NS3G	**N4=**	FP6802-35CS3G	**N9=**
FP6802-39NS3G	**N5=**	FP6802-37CS3G	**R0=**
		FP6802-39CS3G	**R1=**

SC-82 Marking

Part Number	Product Code
FP6802-22NC8G	**aT=**
FP6802-27CC8G	**R2=**
FP6802-39CC8G	**R3=**

Typical Application Circuit

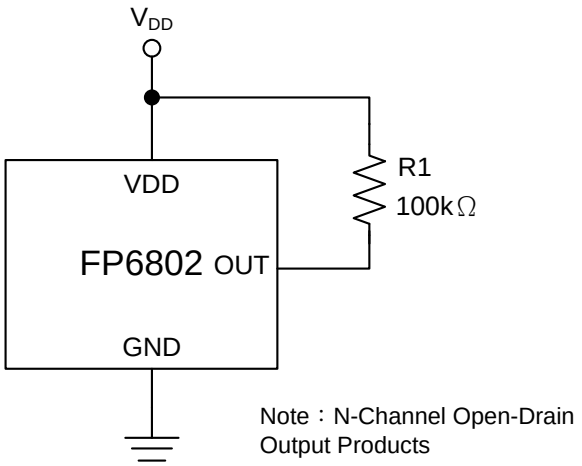

Figure 2. Typical Application Circuit of FP6802

Functional Pin Description

Pin Name	Pin Function
GND	Ground
NC	No connection
OUT	When the power supply voltage is lower than the detection threshold, the OUT is low.
VDD	Supply Voltage

Block Diagram

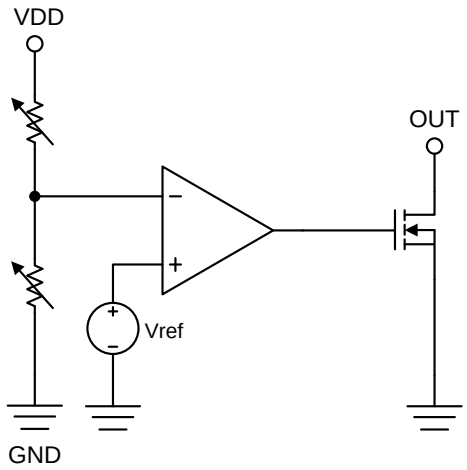

Figure 3. N-Channel Open-Drain Output Product

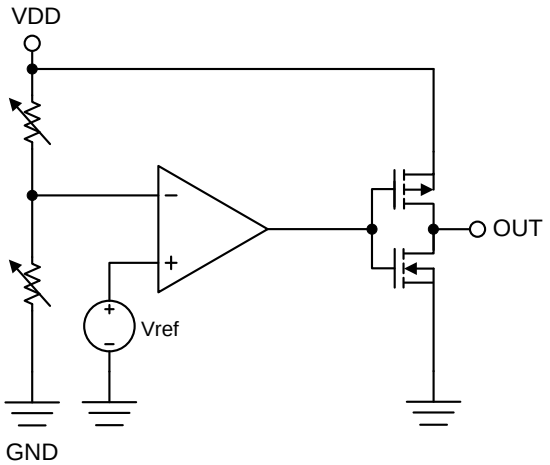

Figure 4. CMOS Push-Pull Output Product

Absolute Maximum Ratings

- Supply Voltage (VDD to GND) ---------- -0.3V to +6V
- OUT Voltage (Push-Pull) ---------- -0.3 to (V_{DD} +0.3V)
- OUT Voltage (Open Drain) ---------- -0.3 to (V_{DD} +0.3V)
- Output Current ---------- +20mA
- Power Dissipation @ T_A=25°C (P_D)
  - SOT-23 ---------- +400mW
  - SC-82 ---------- +200mW
- Package Thermal Resistance, (θ_{JA})
  - SOT-23 ---------- +250°C/W
  - SC-82 ---------- +500°C/W
- Maximum Junction Temperature ---------- +150°C
- Storage Temperature Range (T_S) ---------- -65°C to +150°C
- Lead Temperature (Soldering, 10sec.) ---------- +260°C

Note 1：Stresses beyond those listed under “Absolute Maximum Ratings" may cause permanent damage to the device.

Recommended Operating Conditions

- Supply Voltage (V_{DD} to GND) ---------- +1.0V to +5.5V
- Operation Temperature Range ---------- -40°C to +85°C

Electrical Characteristics

(V_{DD}=5V, T_A=25°C, unless otherwise specified.)

Parameter	Symbol	Conditions	Min	Typ.	Max	Unit
V_{DD} Range	V_{DD}		1.0		5.5	V
Supply Current	I_{DD}	$-V_{TH}$ < 3.3V, V_{DD} = 3.6V		2.5	5	μA
		3.3V < $-V_{TH}$ < 4.7V, V_{DD} = 5V		2.5	5	
Detection Threshold	$-V_{TH}$		0.98x($-V_{TH}$)	$-V_{TH}$	1.02x($-V_{TH}$)	V
Hysteresis Width	V_{HYS}		3%	5%	7%	V_{TH}
Detection Threshold Temperature Coefficient (Note3)	TC			50		ppm/°C
Output Current	I_{OUT}	NCH, V_{DD} =2.2V, V_{DS} =0.5V	5	10		mA
		PCH , V_{DD} =4.8V, V_{DS} =0.5V	3	6		
Delay Time (OUT inversion) (Note3)	T_D	Inverts from V_{DR} to OUT (Note2)		0.03		ms

Note 2：Release voltage: V_{DR}= $-V_{TH}$ + V_{HYS}

Note 3：The specification is guaranteed by design, not production tested.

Typical Performance Curves

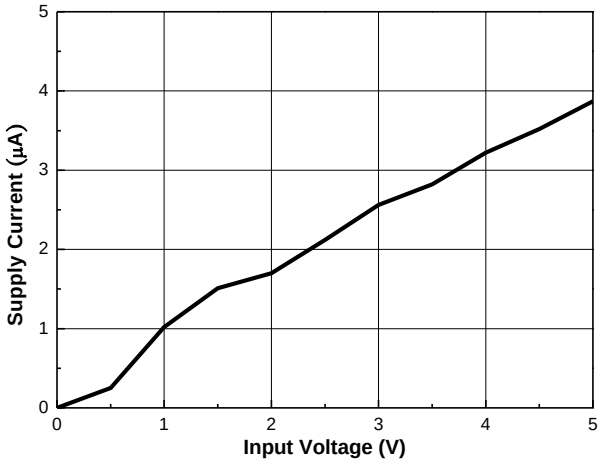

Figure 5. Supply Current Consumption (I_{DD}) vs. Input Voltage (V_{DD}) for $-V_{TH}$=2.4V

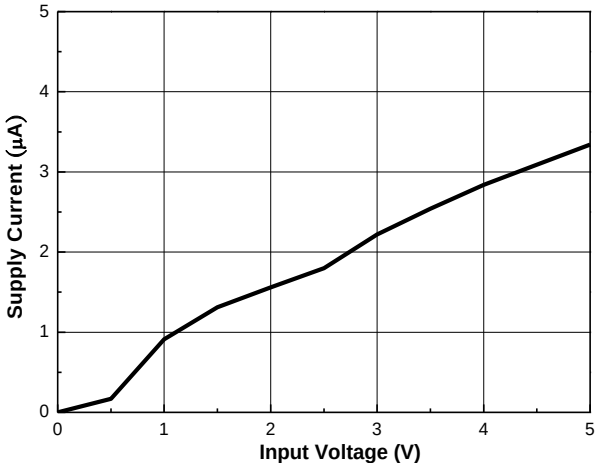

Figure 6. Supply Current Consumption (I_{DD}) vs. Input Voltage (V_{DD}) for $-V_{TH}$=2.7V

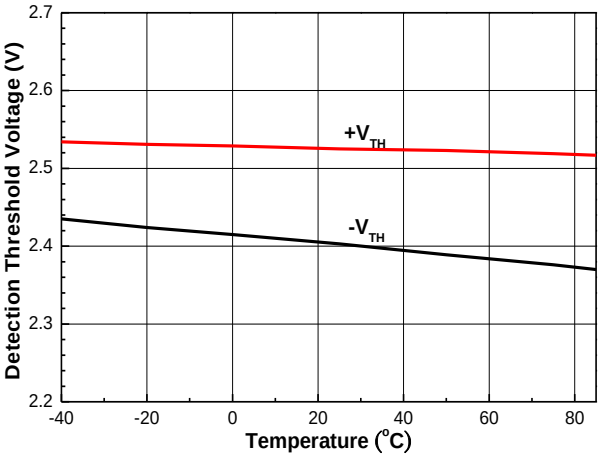

Figure 7. Detection Threshold Voltage ($\pm V_{TH}$) vs. Temperature (Ta) for $-V_{TH}$=2.4V

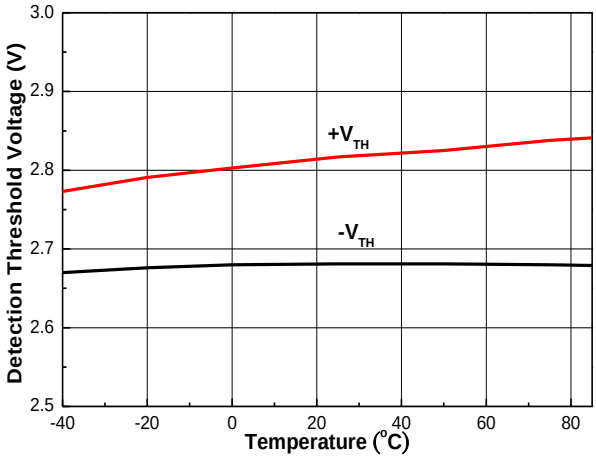

Figure 8. Detection Threshold Voltage ($\pm V_{TH}$) vs. Temperature (Ta) for $-V_{TH}$=2.7V

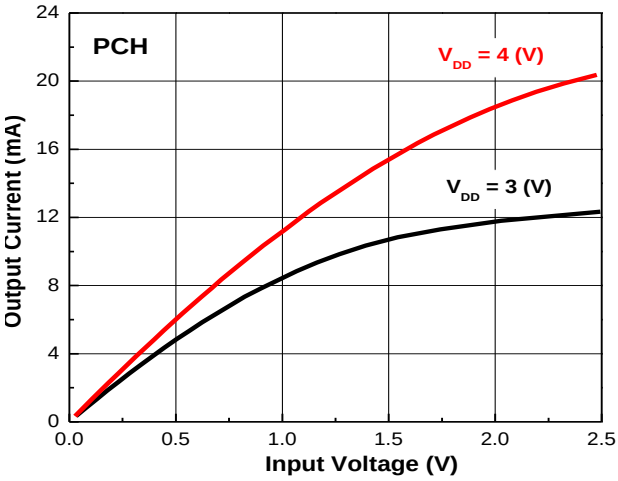

Figure 9. PCH Output Current (I_D) Capability for $-V_{TH}$=2.7V

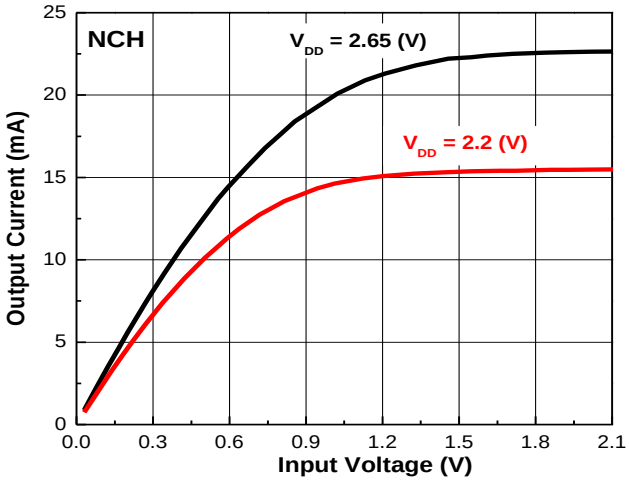

Figure 10. NCH Output Current (I_D) Capability for $-V_{TH}$=2.7V

Outline Information

SC- 82 Package (Unit: mm)

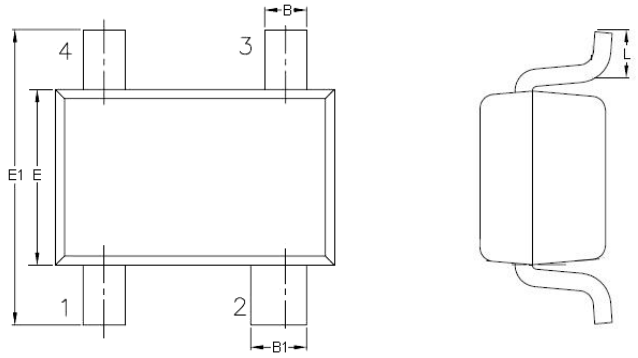

SYMBOLS UNIT	DIMENSION IN MILLIMETER	
	MIN	MAX
A	0.80	1.10
A1	0.00	0.10
A2	0.80	1.00
B	0.25	0.40
B1	0.35	0.50
D	1.80	2.20
E	1.15	1.35
E1	1.80	2.40
e	1.20	1.40
L	0.25	0.45

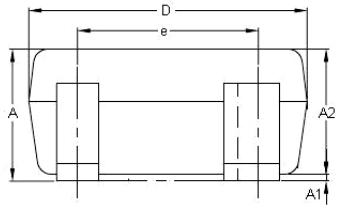

Outline Information (Continued)

SOT-23-3 Package (Unit: mm)

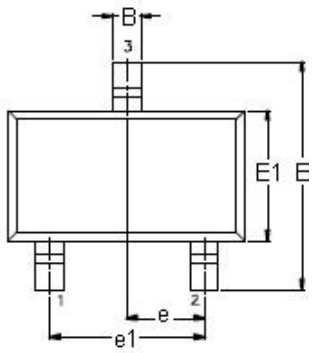

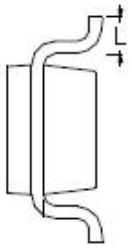

SYMBOLS UNIT	DIMENSION IN MILLIMETER	
	MIN	MAX
A	0.70	1.45
A1	0.00	0.15
A2	0.70	1.30
B	0.30	0.50
D	2.70	3.10
E	2.60	3.00
E1	1.40	1.80
e	0.85	1.05
e1	1.80	2.00
L	0.30	0.60